Latin American Journal of Education
www.lajoe.org

SOLVING ECONOMIC PROBLEMS USING AN INNOVATIVE APPROACH

https://doi.org/10.5281/zenodo.23576389

Kholbozorov Kuvonchbek
ISFT University, University street 7, *Tashkent, Uzbekistan.*
ORCID: 0000-0002-1516-7423.
E-mail. *x.quvonch92@gmail.com*

Annotation. *The article provides instructions on how to solve economic problems in the nonlinear programming department of "Mathematics for Economists" using an innovative approach. The graphical environment of GeoGebra was used to solve the problem. The solution to the problem was found visually.*

Keywords: *GeoGebra, innovative approach, linear programming, nonlinear programming, plane, profit function, cost function, objective function, mathematical model.*

1. Introduction. Linear programming is a branch of mathematical programming that seeks to maximize profits or minimize costs by rationally allocating limited resources (raw materials, equipment, land, water, fertilizers, etc.). teaches

The formation of linear programming had a major impact on the development of economic thought in the second half of the twentieth century. The awarding of the Nobel Prize to the Russian scientist LV Kantorovich, who first discovered the theory of linear programming in 1975, and the mathematician in economics, the first author of the term "linear programming", the American scientist T.Ch. can be considered as.

The linear programming method allows you to search for and find the largest and smallest values of a linear function when limiting conditions are placed on the unknowns that are part of it.

As you know,

$$q_i(x_1, x_2, ..., x_n) \le b_i, \qquad (i = \overline{1,m}) \tag{1}$$

$$Z = f(x_1, x_2, ..., x_n) \to \max \tag{2}$$

The study of conditions under a single system is called mathematical programming.

If at least one of the functions involved in problem (1), (2) is a nonlinear function, then the problem is called a "nonlinear programming problem" [1]. There is no single way to find the optimal solution to a nonlinear programming problem. This can be seen as one of our efforts to find a convenient way to find

Latin American Journal of Education
www.lajoe.org

the optimal solution to nonlinear programming problems.

We set ourselves the task of finding the optimal solution to nonlinear programming problems using GeoGebra, a multifunctional program that is convenient for drawing various geometric shapes, creating objects, working with function graphs, as well as various statistical models.

GeoGebra is a dynamic math program for all levels of education that combines geometry, algebra, spreadsheets, graphics, statistics, and calculations in a single engine. In addition, GeoGebra offers an online platform with over 1 million free classroom resources created by our multilingual team. These resources can be easily shared through our collaboration platform GeoGebra Classroom where student progress can be tracked in real time. GeoGebra is a community of millions of users located in almost every country. It has become a leading provider of dynamic math applications supporting science, technology, engineering and mathematics (STEM) education and innovation in teaching and learning around the world. The GeoGebra math engine supports hundreds of educational websites around the world in a variety of ways, from simple demonstrations to fully online assessment systems [2].

The work of Academician Gulyamov [3] and others is to teach future economists the use of information systems in various sectors of the economy and the use of automated information technology in management. This textbook explores the conceptual aspects of automation. Automated information systems, information security and their classification are considered. Special attention was paid to automated information technologies and software used in accounting, taxation and taxation, banking, management, treasury and insurance activities. In the digital economy, the focus is on the information security of existing electronic banking payment systems. The main directions of the use of digital platforms in the information complexes of the economy, including e-commerce, e-government, cryptocurrency and digital money are widely interpreted. The LMS and CMS systems covered in the distance learning courses are covered in detail. The textbook is intended for students, masters, doctoral students and teachers studying information science and technology in economics.

Indian scientist G. Rasch [4] in his research has shown that the main purpose of teaching the subject of "Computer Graphics" should be to develop creative activity in students to design production problems on a computer.

Although Spanish scientists L.T.Erig [5], H.J.Chery [6], R.L.David [7] have conducted research on the use of three-dimensional interactive graphics to teach equipment manufacturing processes, “ He tried to use three-dimensional modeling in teaching the subject of "Computer Graphics", but did not study enough issues such as the

Latin American Journal of Education
www.lajoe.org

development of spatial imagination of students, the development of creative activity in computer design.

Analysis of the research shows that the problem of developing a model for the development of creative activity of students and the design of teaching methods in higher education institutions (HEIs) using the capabilities of various graphics programs in the teaching of "Computer Graphics" has not been studied. rsatdi. The lack of scientific and pedagogical solutions to these problems means that students do not fully understand the purpose and content of teaching computer graphics in universities, lack of spatial imagination in modeling issues of their specialization using the capabilities of various graphics programs, "Drawing geometry and Engineering Graphics ”is an integral part of the subject“ Computer Graphics ”. Korean scientist Z.Zuo [8] conducted research on the introduction of computer technology and improvement of teaching in the teaching of "Computer Graphics". In his research, he argued that "Descriptive Geometry and Engineering Graphics" should be conducted in conjunction with "Computer Graphics."

In his dissertation research VS Kornilov [9] believes that the most important task of pedagogy is to find, collect and analyze various technologies and methods of using teaching aids in the educational process in such a way as to give them the characteristics of fitness for production. The introduction of information technology in education, in particular computer mathematics packages, into the learning process begins to shape students ’computer visual thinking, which includes the management of images on a computer screen. Students are given the opportunity to actively and consciously understand a variety of mathematical concepts that were previously unfamiliar; successful solution of educational mathematics problems.

From a pedagogical point of view, Ye.A. Daxer [10] believes that the computer mathematics set is a didactic teaching tool that allows optimizing the learning process when an appropriate teaching methodology is available. Informatics is a tool designed to automate the solution of mathematical problems in various fields of science, technology and education, combining a modern user interface, analytical and numerical methods for solving various mathematical problems, tools for visualizing the results of calculations. At the decision-making stage, such a tool allows for a more reliable analysis of the results obtained.

In his article, AG Tikhobayev [11] called for the use of modern computer technology for professional self-education of students. Interactive computer technology allows you to acquire not only theoretical knowledge but also practical skills. In the context of the introduction of new information technologies, this problem is especially relevant.

Results and discussion. In his work, KH Kholbozorov [12] gave methodological recommendations on the

Latin American Journal of Education
www.lajoe.org

advantages and disadvantages of GeoGebra over other mathematical programs, as well as on how to facilitate students' imagination when using GeoGebra in teaching Mathematics for Economists.

KH Kholbozorov [13] studied the geometric interpretation of economic problems using the program "GeoGebra". In order to show the appropriateness of the application of the program "GeoGebra" in practice, the geometric interpretation of linear, nonlinear problems in space was studied, and methodological recommendations for the application of this program were given.

The article by AG Abdurahmanov [14] discusses the relevance of the use of mathematical packages in the learning process. Universal math kits create new opportunities to improve education, without exception, its stages. Problems related to the use of mathematical packages and ways to solve these problems are also noted. As an example, the graphical solution of non-standard equations using the Maple program is considered.

In the research work of AV Nesterova [15], mathematical sets significantly facilitate the learning activities of students. Their use allows you to avoid the need to perform large mathematical calculations manually, overcome difficulties in solving economic and mathematical problems and analyze the results obtained, easily prepare reports on laboratory work, present calculations in graphical form.

In the work of YV Mazurenko [16] the issues of teaching the subject of "Higher Mathematics" to 1st year students using computer programs are considered. Features of using different computer programs in multi-stage initial preparation of students are considered. It turns out that computer packages are not used intensively in the educational process, despite their great educational potential. The possibilities of using both specialized math packages and the most common office applications were analyzed. First-year students of technical colleges are given the opportunity to use mathematical programs in the study of "Linear Algebra".

In her research, IV Belenkova [17] noted that computer mathematics packages allow students to creatively solve problems in the following areas: mathematical modeling, probability theory, mathematical statistics, numerical methods, linear programming, optimization methods, mathematical analysis, geometry, integral and differential equations, etc.

In his monograph, VM Monakhov [18] writes that computer technology develops thinking skills, basic computer skills, the ability to acquire and apply basic knowledge in the field of computer science and modern information technology, the ability to work independently and in a team.

Fractional linear economic problems are encountered in production problems. In solving such problems comes the problem of finding the maximum,

Latin American Journal of Education
www.lajoe.org

minimum of the given problems. If the function is complex, it is almost impossible to solve it analytically. In this case, it is advisable to solve the problem graphically. For example, consider the following issue in the case of I.L. Akulich [19]. Here are some ways to solve economic problems using an innovative approach, namely the GeoGebra program.

Issue. In the account of firm A 12 sh.p. There is unit money. The prices of x, y and z raw materials are 1, 2 and 3 sh.p. currency. Using the money in the account, find the x, y, and zs that maximize the profit function.

Solution. According to the terms of the case, and the unit price of raw materials is equal to 1.2 and 3 shs, respectively. It will be in the form of total costs, for which the company plans to spend 12 shs. So, the mathematical model of the problem is as follows.

$$\begin{cases} x+2y+3z=12 \\ x\geq 0,\ y\geq 0,\ z\geq 0 \end{cases}$$

$$Q=x^{0.2}y^{0.3}z^{0.5}\rightarrow \max$$

We will solve this problem using GeoGebra. To do this, first run GeoGebra, go to the 3D Graphics section and draw a plane (Figure 1).

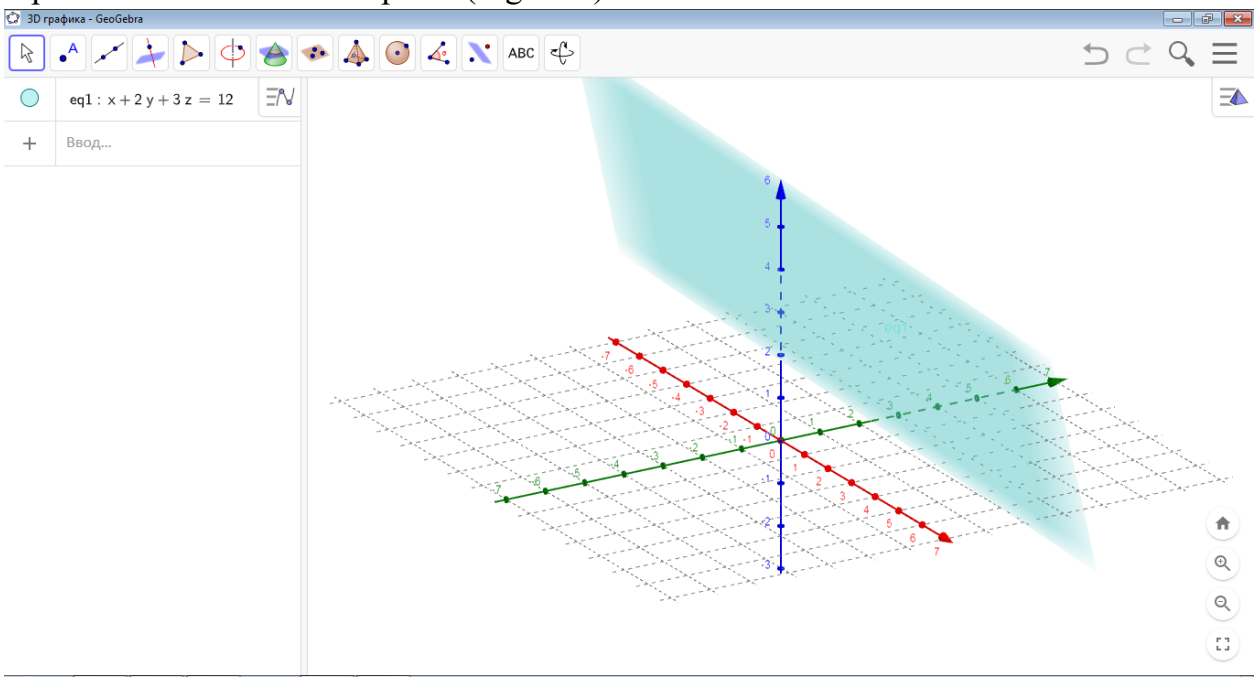

Figure 3. Plain.

To draw the target function, open the 2D Graphics section and enter the parameter change intervals from the Slider command [13]. For example, we define the range of variation a from 0 to 5 (Figure 3).

Latin American Journal of Education
www.lajoe.org

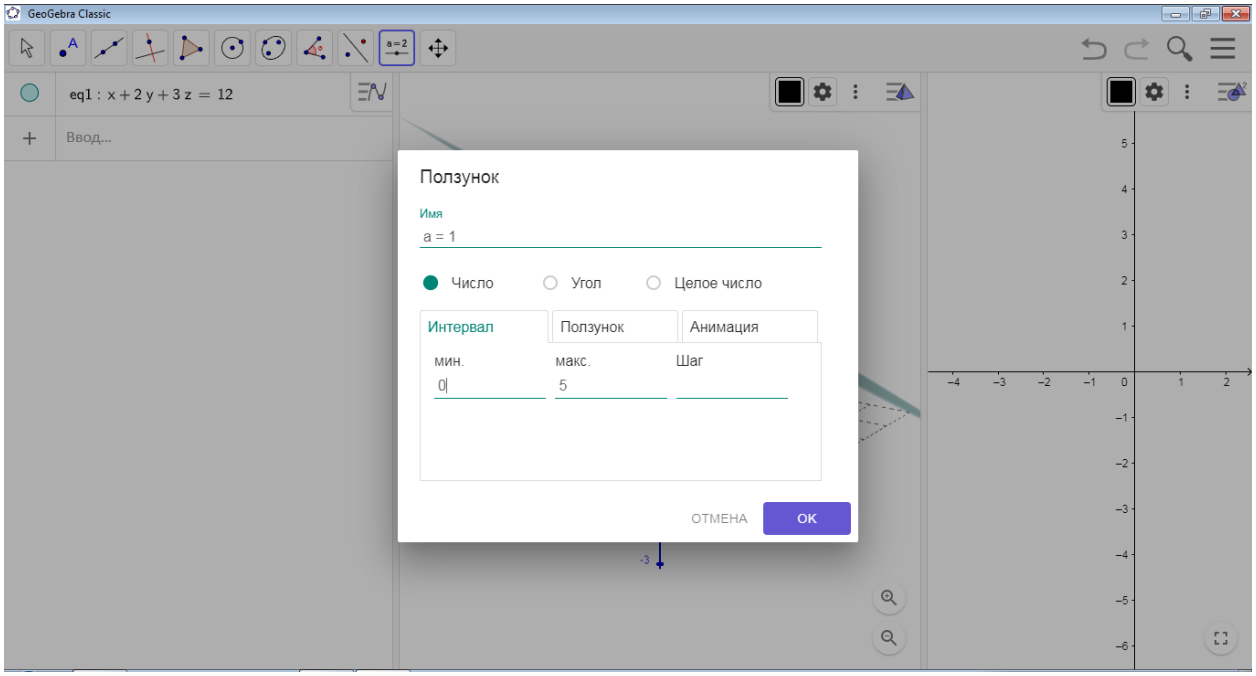

Figure 4. Parameter

Then we equate the objective function to parameter a and find z from it. From this we get the equation and draw the surface outside the 2D Graphics section (Figure 5).

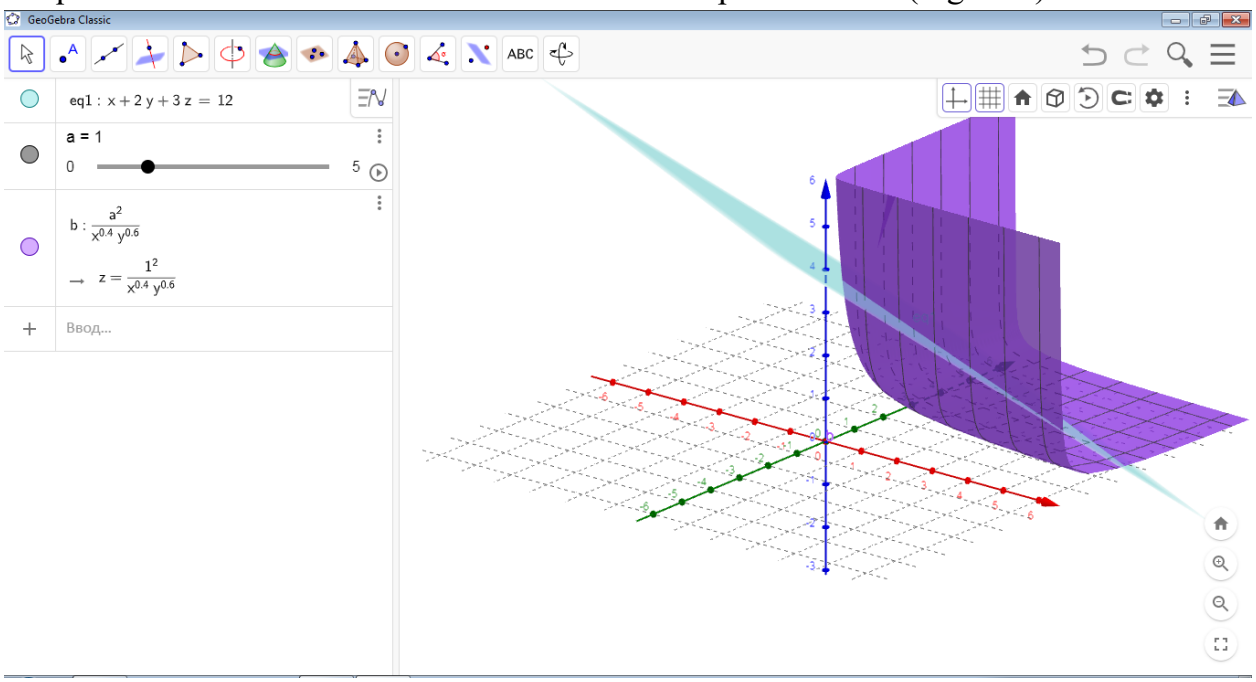

Figure 5. Surface and plane

As can be seen from the diagram above, the plane and the surface intersect. This means that it is not the optimal solution. We need to find the point where the surface touches the plane. To do this, we start changing the parameter and stop the parameter when we reach the desired location. If we denote the point of impact by A, we can see its coordinates (Figure 6).

Latin American Journal of Education
www.lajoe.org

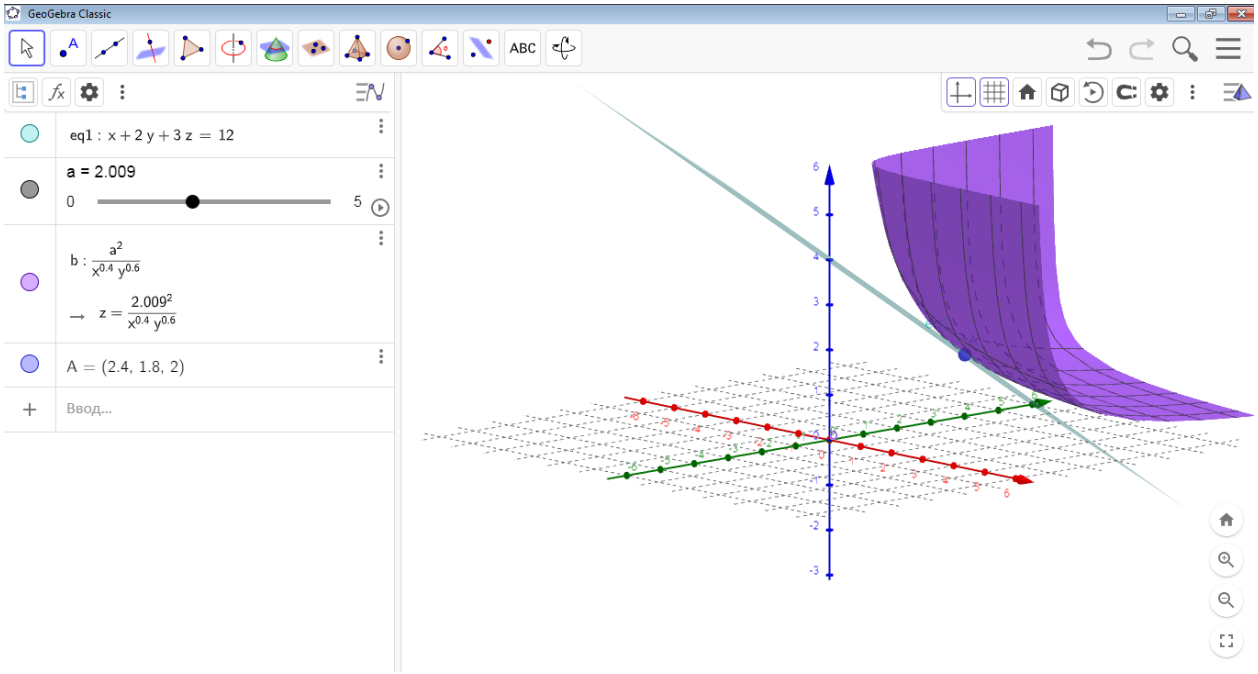

Figure 6. Plane and surface test point.

If necessary, we can refine the graph to see the coordinates of point A with sufficient accuracy. Figure 4 shows that the maximum gain is approximately 2.0097, x = 2.4, y = 1.8, and z = 2.

Conclusion

In this work, the graphical environment of the program "GeoGebra" was used to solve economic problems in the field of nonlinear programming in "Mathematics for Economists" with the help of innovative approaches.

In the first problem presented in the article, the field is a polygon, and if you need to check each end for optimality in the classical methods to find its optimal solution, it is shown that the optimal solution can be obtained visually in the method we propose.

The optimal solution of the second problem above is a solution of a system of nonlinear equations in classical methods, the solution of which is based on complex calculations to find the solution due to nonlinearity, and the method we propose shows that the optimal solution can be obtained graphically.

For economists, the use of innovative methods in teaching mathematics can save time, broaden the horizons, and visualize the solution.

Latin American Journal of Education
www.lajoe.org

REFERENCES:

[1]. A.Xashimov, G.Xujaniyozova, A.Sotvoldiyev, Q.Xolbozorov. Iqtisodchilar uchun matematika. Darslik. –T. “IQTISOD-MOLIYA”, 2022. 315 bet.

[2]. https://www.geogebra.org/about

[3]. Akademik S.S.G‘ulomov va boshqalar. Iqtisodiyotda axborot komplekslari va texnologiyalari. Darslik. -T .: “Fan va texnologiya”, 2019, 448 bet.

[4]. G.Rasch Probabilistic Models for Some Intelligence and Attainment Tests. Chicago. Univ. Of Chicago Press. 2017, p.199.

[5]. L.T.Erig. construction of 3D modeling. Ispania, 2014.-34 pp.

[6]. H.J.Chery Animation and computer graphics. AQSH, 2015.-90 pp.

[7]. R.L.David. visualisation and animation of computer graphics.Korea, 2014. -105 pp.

[8]. Z.Zuo. Engineering computer graphs and animation 3D modeling.Korea. 2013.-56 pp.

[9]. https://zhurnalpedagog.ru/servisy/publik/publ?id=3393.

[10]. Ye.A. Daxer. Nekotorie aspekti bilingvisticheskoy modeli obucheniya matematicheskim dissiplinam studentov ekonomicheskogo profilya. Kiyev. Gnozis, 2013. - Tom 5.

[11]. A.G. Tixobayev. Interaktivnie kompyuternie texnologii obucheniya. VestnikTGPU (TSPU Bulletin). 2012. 8 (123).

[12]. Q.X.Xolbozorov. “Iqtisodchilar uchun matematika” fanini o‘qitishda “GeoGebra” dasturining qulayliklari. O’zMU xabarlari. № 2021.1.5. 147-150 pp.

[13]. Q.X.Xolbozorov. Iqtisodga doir masalalarni yechishda “GeoGebra” dasturidan foydalanish. “Fizika, matematika va informatika”. № 3/2020. 29-37 pp.

[14]. Abduraxmanov. Primeneniye matematicheskix paketov v obrazovanii na primere matematicheskogo paketa Maple. "Ekonomika i sotsium" № 3(82) 2021 www.iupr.ru

[15]. http://ivdon.ru/uploads/article/pdf/R_18_Nesterova.pdf_1956.pdf .

[16]. https://cyberleninka.ru/article/n/aspekty-primeneniya-kompyuternyh-programm-pri-prepodavanii-vysshey-matematiki-v-vuze/viewer.

[17]. Belenkova, I.V. Metodika ispolzovaniya matematicheskix paketov v professionalnoy podgotovke studentov vuza [Tekst]: dis. kand. ped. nauk: 13.00.08: Yekaterinburg, 2004. – 261 s.

[18]. Monaxov, V.M. Vvedeniye v teoriyu pedagogicheskix texnologiy [Tekst]: Monografiya / V.M. Monaxov. – Volgograd: Peremena, 2006. – 345 s.

[19]. A.I.Tillaev. Improving the teaching of "Information Technology" in higher education on the basis of multimedia technologies. European Journal of Molecular & Clinical Medicine. Volume 7, Issue 2, 2020.